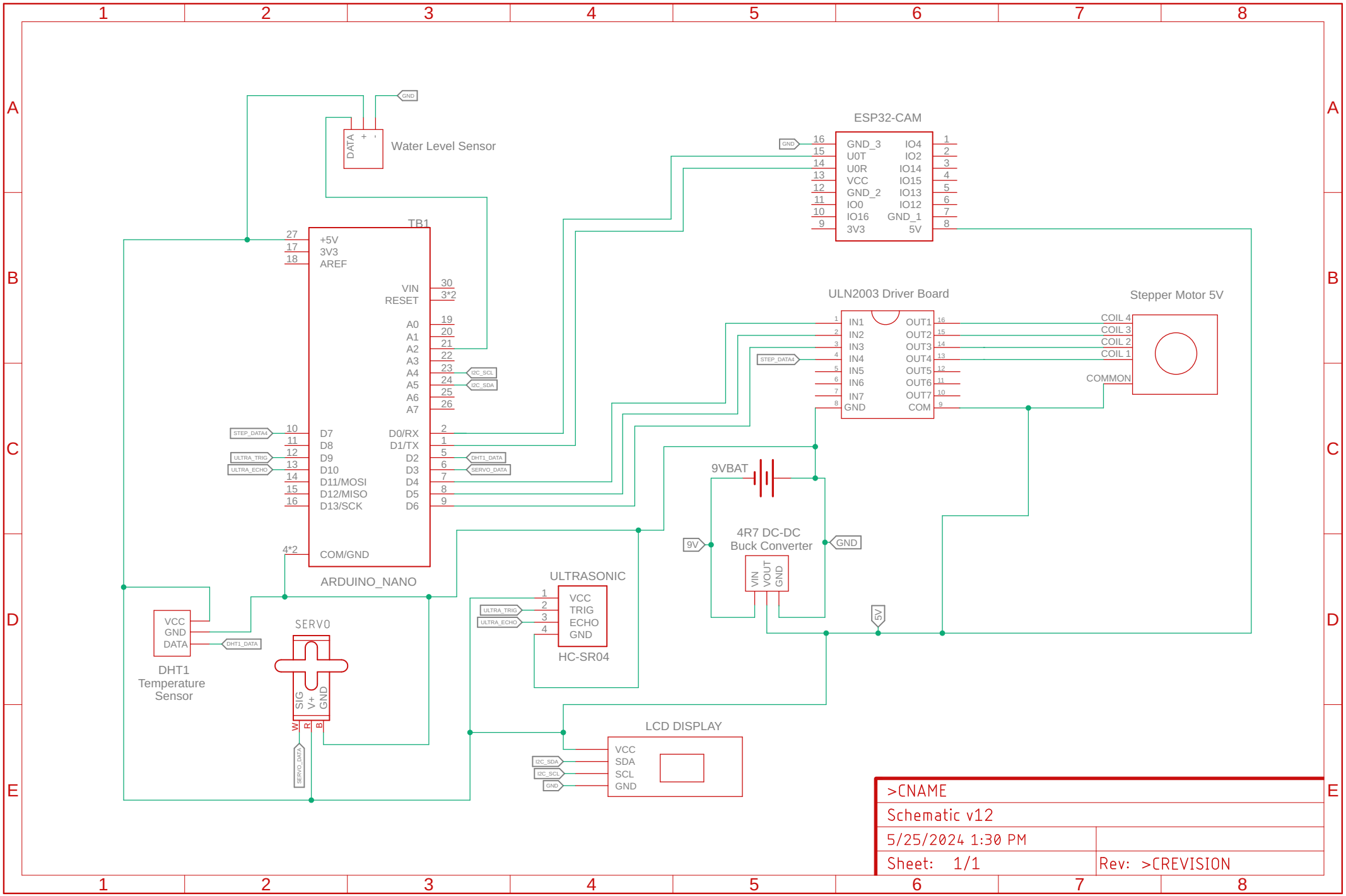
Water Level Sensor
DATA
GND
ESP32-CAM
GND_3
U0T
U0R
VCC
GND_2
IO0
IO16
3V3
IO4
IO2
IO14
IO15
IO13
IO12
GND_1
5V
TB1
+5V
3V3
AREF
VIN
RESET
A0
A1
A2
A3
A4
A5
A6
A7
D7
D8
D9
D10
D11/MOSI
D12/MISO
D13/SCK
D0/RX
D1/TX
D2
D3
D4
D5
D6
COM/GND
ARDUINO_NANO
I2C_SCL
I2C_SDA
STEP_DATA4
ULTRA_TRIG
ULTRA_ECHO
DHT1_DATA
SERVO_DATA
ULN2003 Driver Board
IN1
IN2
IN3
IN4
IN5
IN6
IN7
GND
OUT1
OUT2
OUT3
OUT4
OUT5
OUT6
OUT7
COM
Stepper Motor 5V
COIL 4
COIL 3
COIL 2
COIL 1
COMMON
9VBAT
4R7 DC-DC
Buck Converter
VIN
VOUT
GND
9V
5V
ULTRASONIC
VCC
TRIG
ECHO
GND
HC-SR04
DHT1
Temperature
Sensor
SERVO
SIG
V+
GND
W
R
B
LCD DISPLAY
VCC
SDA
SCL
GND
>CNAME
Schematic v12
5/25/2024 1:30 PM
Sheet: 1/1
Rev: >CREVISION