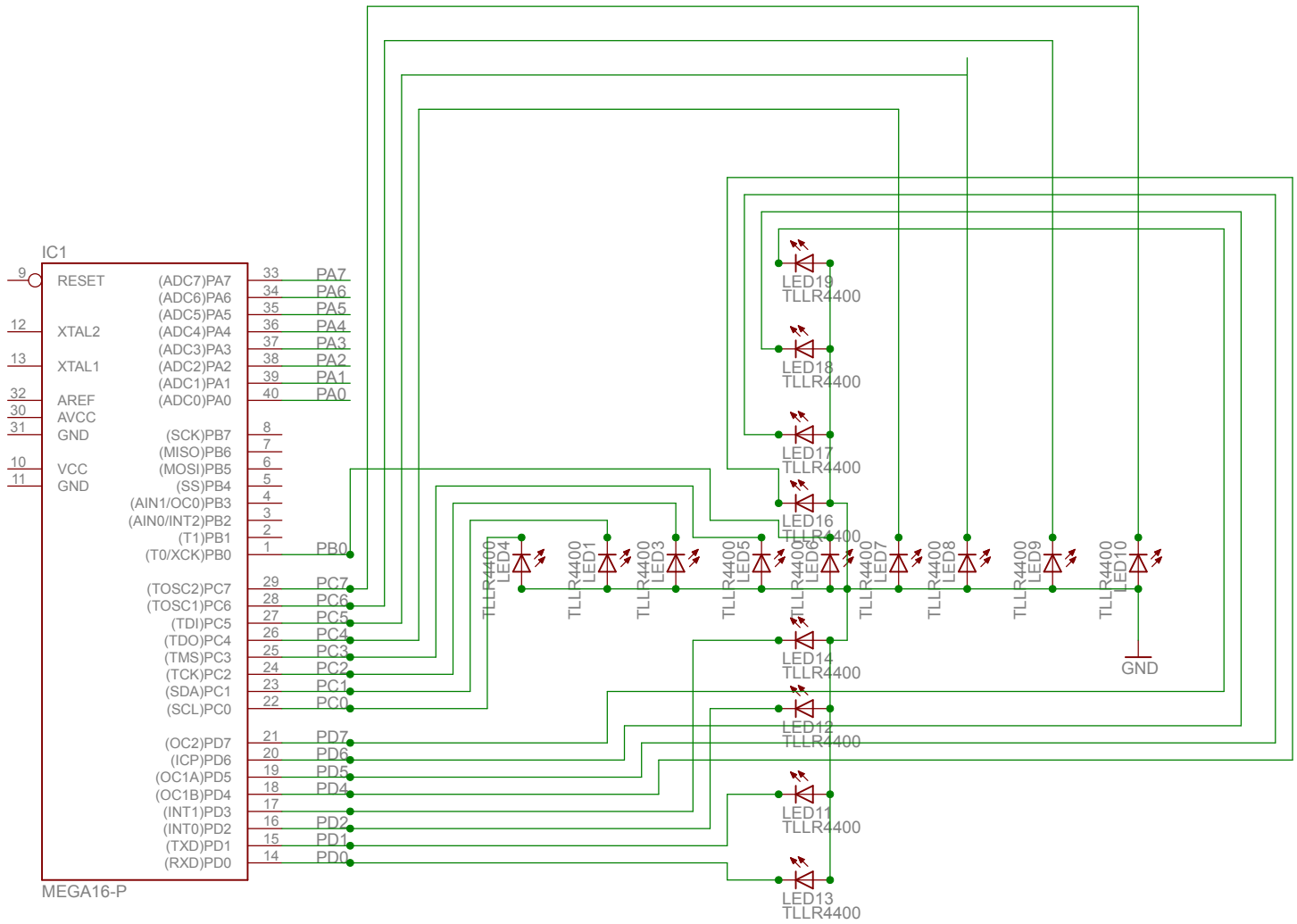
IC1
9 RESET
12 XTAL2
13 XTAL1
32 AREF
30 AVCC
31 GND
10 VCC
11 GND
(ADC7)PA7 33 PA7
(ADC6)PA6 34 PA6
(ADC5)PA5 35 PA5
(ADC4)PA4 36 PA4
(ADC3)PA3 37 PA3
(ADC2)PA2 38 PA2
(ADC1)PA1 39 PA1
(ADC0)PA0 40 PA0
(SCK)PB7 8
(MISO)PB6 7
(MOSI)PB5 6
(SS)PB4 5
(AIN1/OC0)PB3 4
(AIN0/INT2)PB2 3
(T1)PB1 2
(T0/XCK)PB0 1 PB0
(TOSC2)PC7 29 PC7
(TOSC1)PC6 28 PC6
(TDI)PC5 27 PC5
(TDO)PC4 26 PC4
(TMS)PC3 25 PC3
(TCK)PC2 24 PC2
(SDA)PC1 23 PC1
(SCL)PC0 22 PC0
(OC2)PD7 21 PD7
(ICP)PD6 20 PD6
(OC1A)PD5 19 PD5
(OC1B)PD4 18 PD4
(INT1)PD3 17
(INT0)PD2 16 PD2
(TXD)PD1 15 PD1
(RXD)PD0 14 PD0
MEGA16-P
LED19 TLLR4400
LED18 TLLR4400
LED17 TLLR4400
LED16 TLLR4400
LED14 TLLR4400
LED12 TLLR4400
LED11 TLLR4400
LED13 TLLR4400
TLLR4400 LED4
TLLR4400 LED1
TLLR4400 LED3
TLLR4400 LED5
TLLR4400 LED6
TLLR4400 LED7
TLLR4400 LED8
TLLR4400 LED9
TLLR4400 LED10
GND