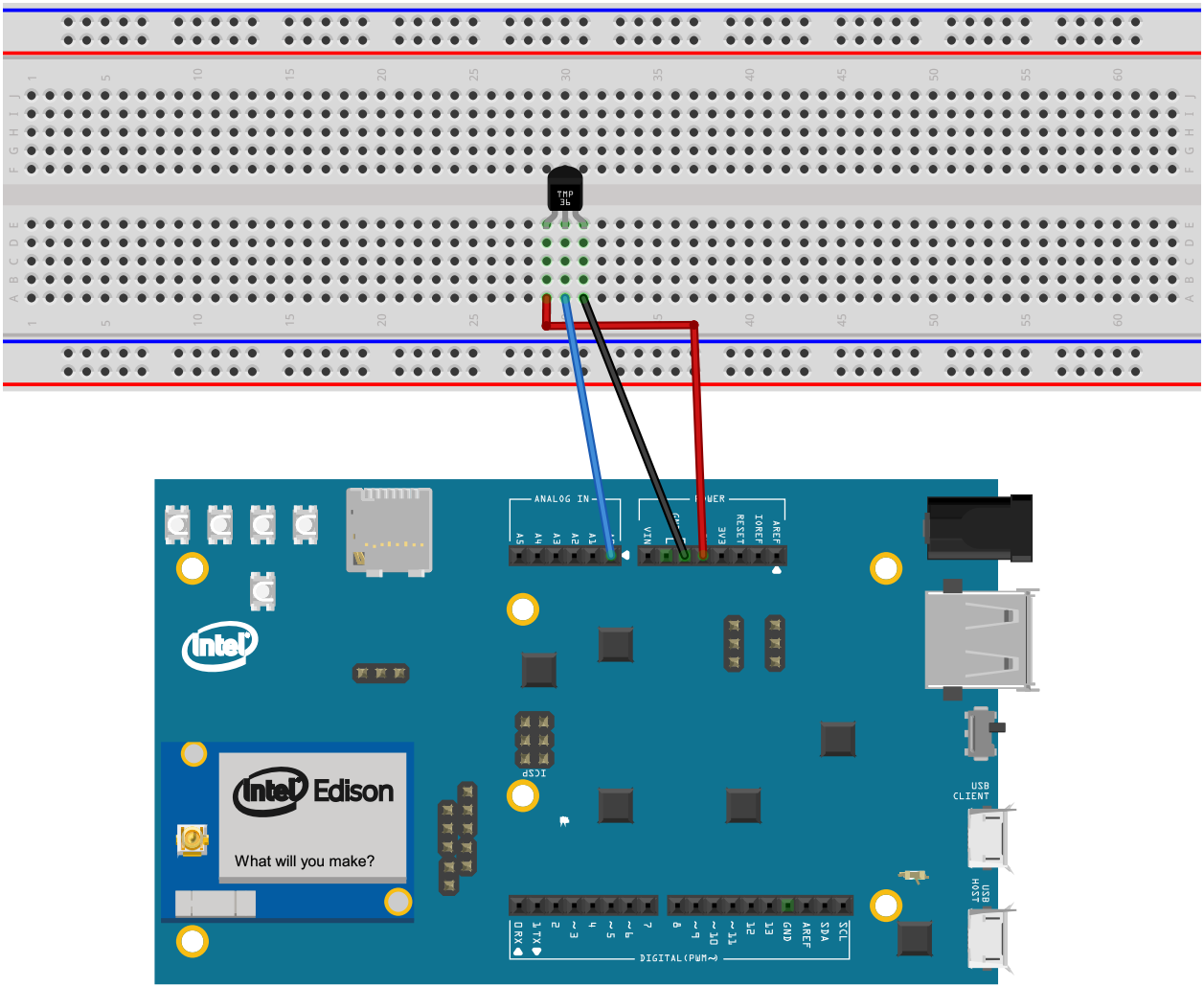
TMP
36
ANALOG IN
POWER
A5
A4
A3
A2
A1
A0
VIN
5V
3V3
RESET
IOREF
AREF
ICSP
Intel
Intel Edison
What will you make?
USB
CLIENT
USB
HOST
DIGITAL(PWM~)
0 RX
1 TX
2
~ 3
4
~ 5
~ 6
7
8
~ 9
~ 10
~ 11
12
13
GND
AREF
SDA
SCL
fritzing