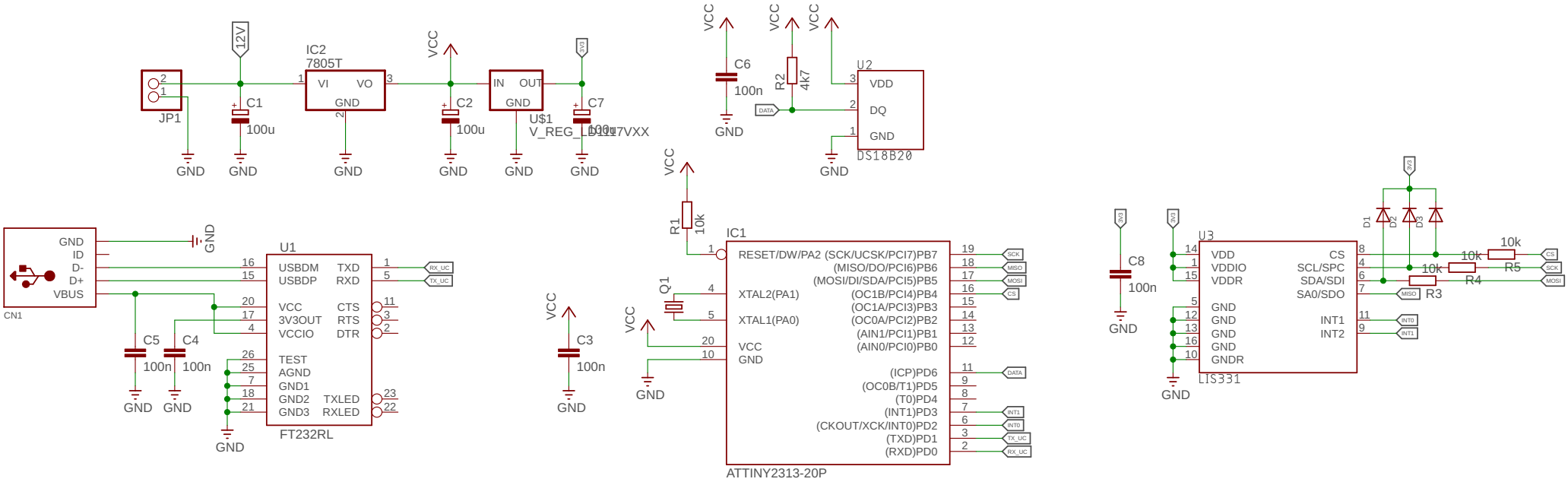
12V
IC2
7805T
VI
VO
GND
JP1
C1
100u
C2
100u
VCC
IN
OUT
U$1
V_REG_LD117VXX
3V3
C7
100u
C6
100n
R2
4k7
DATA
U2
VDD
DQ
DS18B20
GND
CN1
ID
D-
D+
VBUS
U1
USBDM
USBDP
TXD
RXD
VCC
3V3OUT
VCCIO
CTS
RTS
DTR
TEST
AGND
GND1
GND2
GND3
TXLED
RXLED
FT232RL
RX_UC
TX_UC
C5
C4
100n
R1
10k
IC1
RESET/DW/PA2
XTAL2(PA1)
XTAL1(PA0)
(SCK/UCSK/PCI7)PB7
(MISO/DO/PCI6)PB6
(MOSI/DI/SDA/PCI5)PB5
(OC1B/PCI4)PB4
(OC1A/PCI3)PB3
(OC0A/PCI2)PB2
(AIN1/PCI1)PB1
(AIN0/PCI0)PB0
(ICP)PD6
(OC0B/T1)PD5
(T0)PD4
(INT1)PD3
(CKOUT/XCK/INT0)PD2
(TXD)PD1
(RXD)PD0
SCK
MISO
MOSI
CS
INT1
INT0
Q1
C3
ATTINY2313-20P
C8
U3
VDDIO
VDDR
CS
SCL/SPC
SDA/SDI
SA0/SDO
INT1
INT2
GNDR
LIS331
D1
D2
D3
R3
R4
R5